Part I

A.

Because this is a low-pass filter, we know that the capacitors will act as open in the midband.

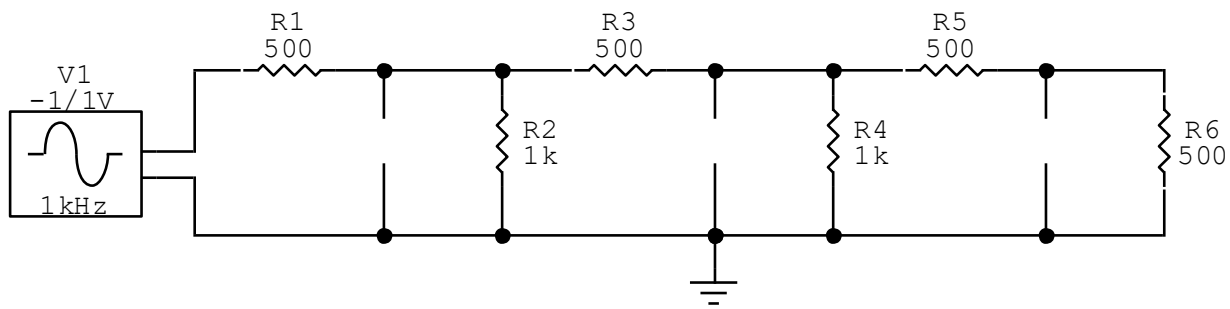

I used this information and switched up the resistor positions until I achieved a gain of 0.125.

Capacitor Values:

Due to the constraint C1>C2>C3 and the fact that the resistors are all close in value, C1 will short first and see C2/C3 as open.

$$\tau_{oc}^{C1} = C1(500 \,||\, 1k \,||\, 1k)$$
$$= 250C1$$
$$\frac{1}{250C1} = 5 \times 10^5/s$$
$$\therefore C1 = 8nF$$

Next, C2 will see C1 as a short and C3 as open.

$$\tau^{C2} = C2(500 \,||\, 1k \,||\, 1k)$$
$$= 250C2$$
$$\frac{1}{250C2} = 5 \times 10^6/s$$
$$\therefore C2 = 0.8nF$$

Finally, C3 will see C1 and C2 as shorts.

$$\tau^{C3} = C3(500 \,||\, 500)$$

$$= 250C3$$

$$\frac{1}{250C3} = 5 \times 10^7/s$$

$$\therefore C2 = 80pF$$

This is the simulated three-pole low-pass filter:

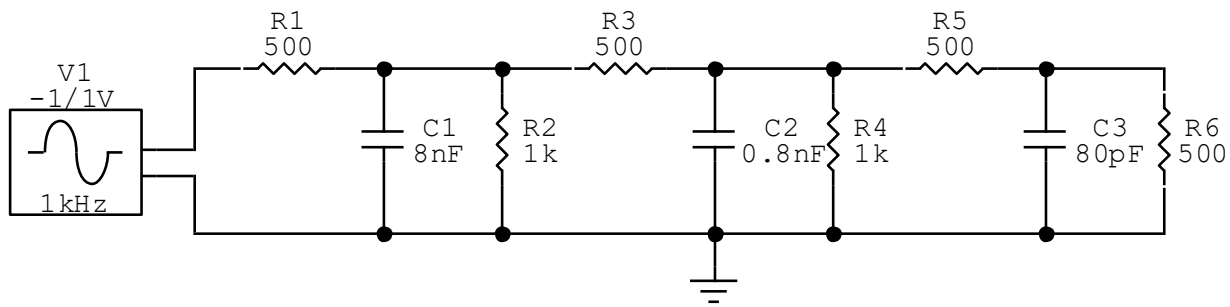

Magnitude Plot:

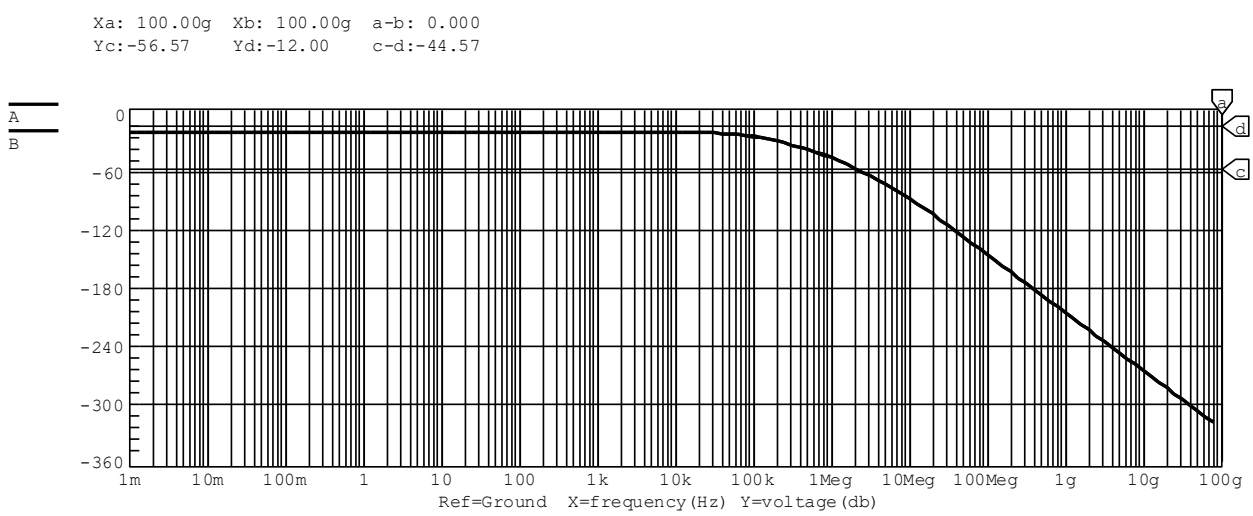

Phase Plot:

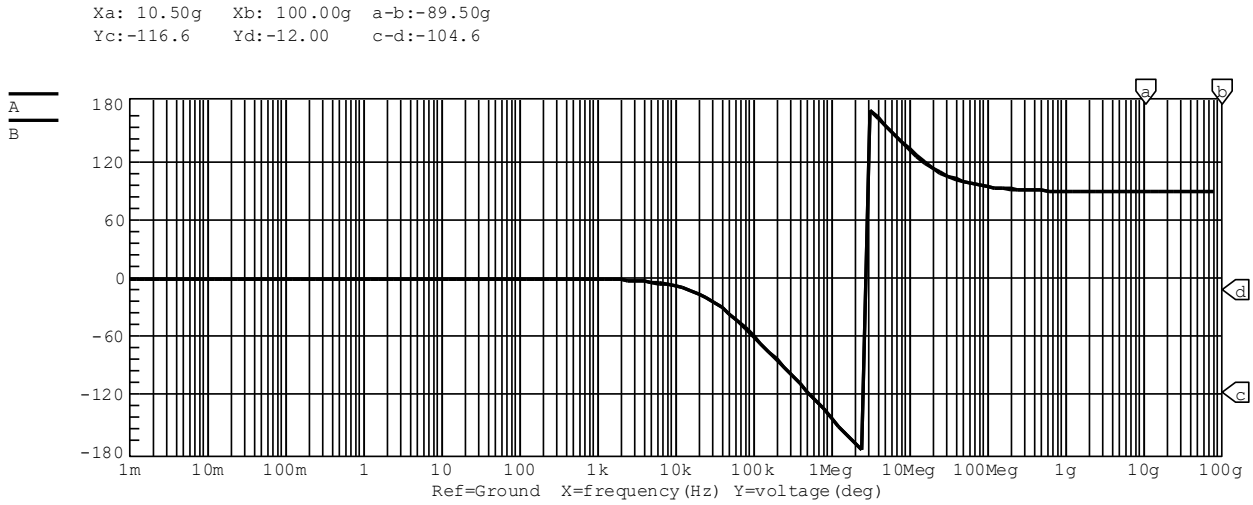

B.

Using sxfer function blocks in Circuitmaker, I constructed the following circuit based on the given transfer function.

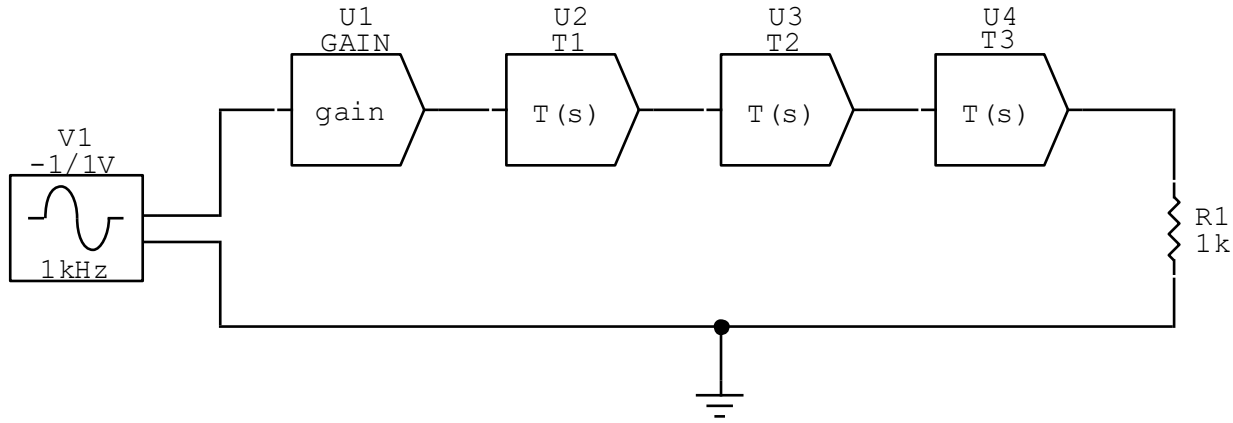

Magnitude Plot:

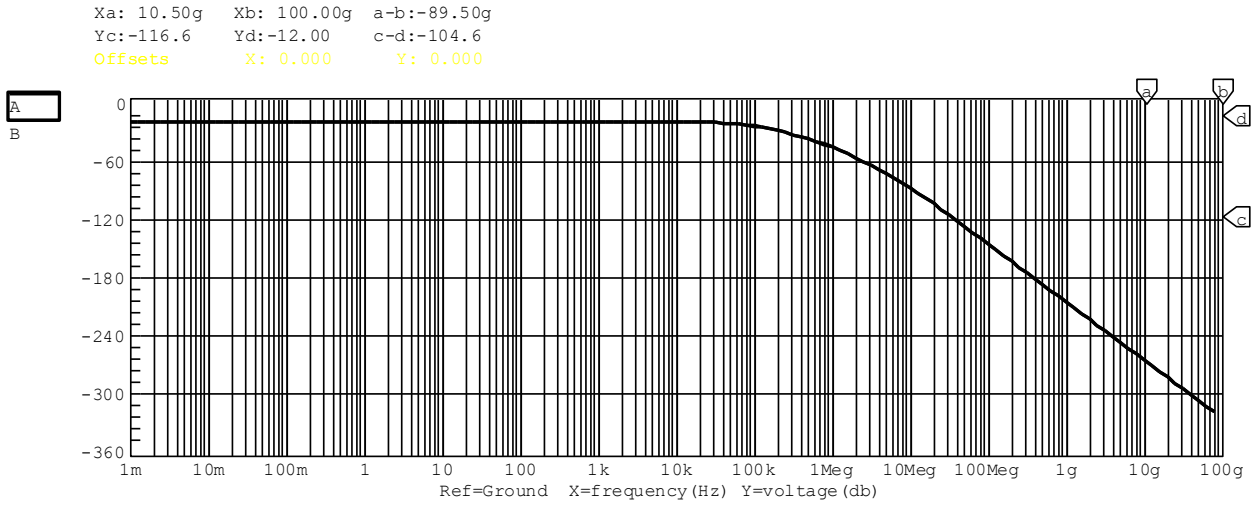

Phase Plot:

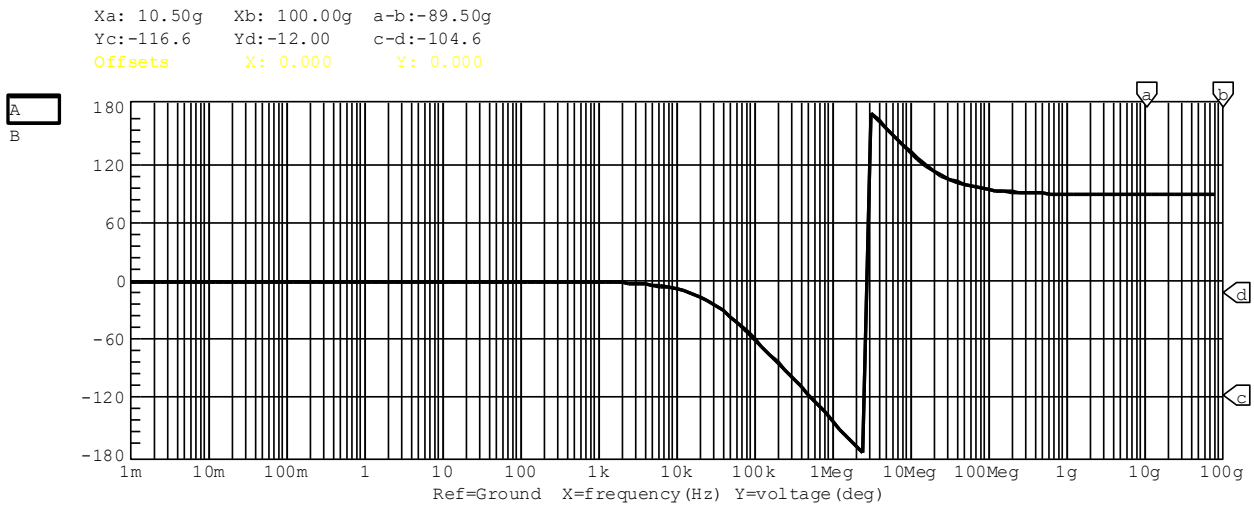

The bode plots are identical to the ones depicted in part A. This is what we would expect because the sxfer circuit is made up of different blocks corresponding to terms of the transfer function. And we used the same transfer function to determine resistor placement and capacitor values.

Part II

A.

This is the simulated four-pole RC circuit:

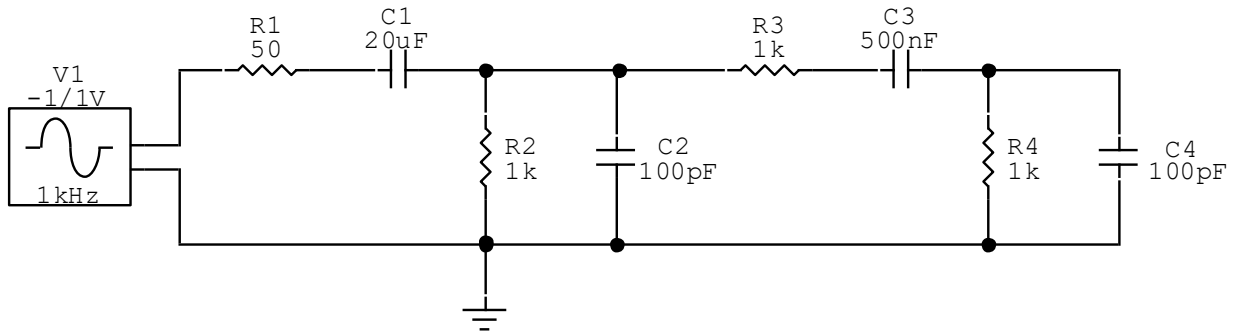

Magnitude Plot:

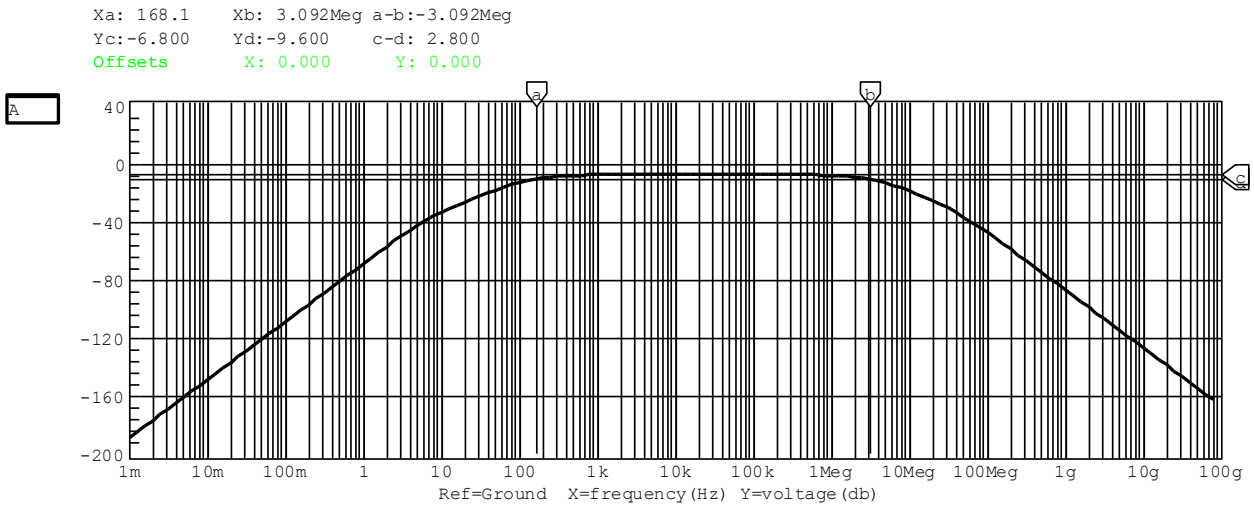

Phase Plot:

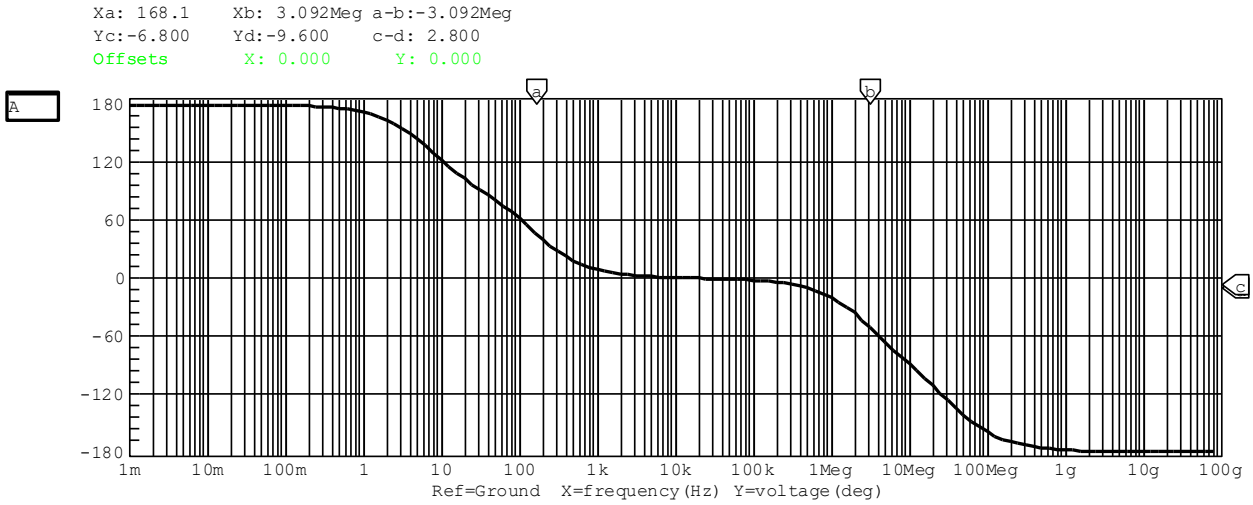

By analyzing the magnitude plot we can approximate the locations of the poles.

Pole	Frequency
ω_{p1}	4.97Hz
ω_{p2}	309.2Hz
ω_{p3}	1.31MHz
ω_{p4}	89.3MHz

B.

For the low frequency response, C2 and C4 are treated as open because they are orders of magnitude smaller than C1 and C3.

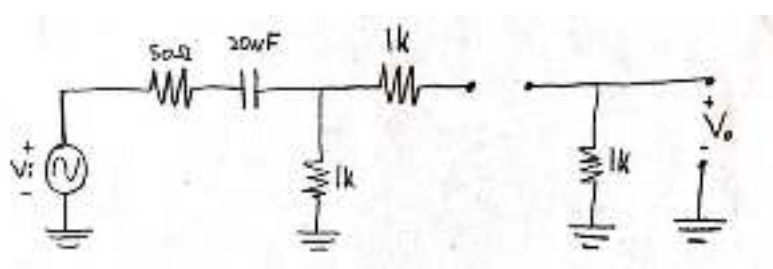

$$\tau_{oc}^{C1} = (1050)(20\mu) = 0.021\text{s}$$

$$\omega_{Lp1} = 47.619\text{rad/s}$$

Next, we will short C1 to find the short circuit time constant for C3:

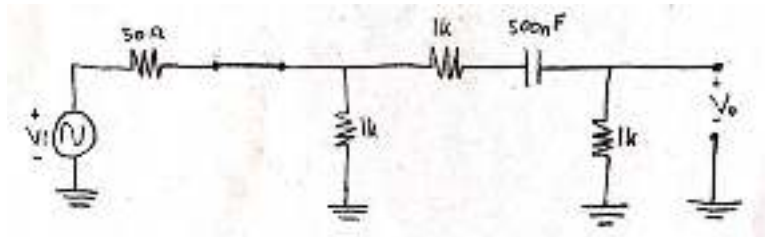

C3 = 500*nF*:

$$\tau_{sc}^{C3} = (50||1k+2k)(500nF) = 1.024\times10^{(-3)}s$$

$$\omega_{Lp2} = 976.744rad/s$$

Then we calculate the low 3dB frequency.

$$\omega_{L3dB} = \sqrt{(47.619)^2 + (976.744)^2}$$

$$= \quad 977.904rad/s$$

$$= \quad \mathbf{155.638Hz}$$

This process is repeated as we experiment with different values for C3.

C3 = 1*μF*:

$$\tau_{sc}^{C3} = (50||1k+2k)(1\mu F) = 2.048\times10^{(-3)}s$$

$$\omega_{Lp2} = 488.372rad/s$$

$$\omega_{L3dB} = \sqrt{(47.619)^2 + (488.372)^2}$$

$$= \quad 490.688rad/s$$

$$= \quad \mathbf{78.095Hz}$$

C3 = 2*μF*:

$$\tau_{sc}^{C3} = (50||1k+2k)(2\mu F) = 4.095\times10^{(-3)}s$$

$$\omega_{Lp2} = 244.186rad/s$$

$$\omega_{L3dB} = \sqrt{(47.619)^2 + (244.186)^2}$$

$$= \quad 248.786rad/s$$

$$= \quad \mathbf{39.595Hz}$$

C3 = 5μ*F*:

$$\tau_{sc}^{C3} = (50||1k+2k)(5\mu F) = 1.024\times10^{(-3)}s$$

$$\omega_{Lp2} = 97.674 rad/s$$

$$\omega_{L3dB} = \sqrt{(47.619)^2 + (97.674)^2}$$

$$= 108.664 rad/s$$

$$= \mathbf{17.294Hz}$$

C3 = 10μ*F*:

$$\tau_{sc}^{C3} = (50||1k+2k)(10\mu F) = 2.048\times10^{(-3)}s$$

$$\omega_{Lp2} = 48.837 rad/s$$

$$\omega_{L3dB} = \sqrt{(47.619)^2 + (48.837)^2}$$

$$= 68.210 rad/s$$

$$= \mathbf{10.856Hz}$$

	***500n*F**	**1μF**	**2μF**	***5μ*F**	**10μF**
ω_{L3dB} (Simulated)	157.1Hz	76.57Hz	41.54Hz	21.06Hz	15.68Hz
ω_{L3dB} (Calculated)	155.638Hz	78.095Hz	39.595Hz	17.294Hz	10.856Hz
% Error	0.931	1.992	4.467	17.882	30.765

We can see from this analysis that increasing the capacitance of C3 decreases the low 3dB cutoff frequency and increases the bandwidth of the filter.

Part III

A.

This is the simulated transconductance amplifier with a miller gain of -200:

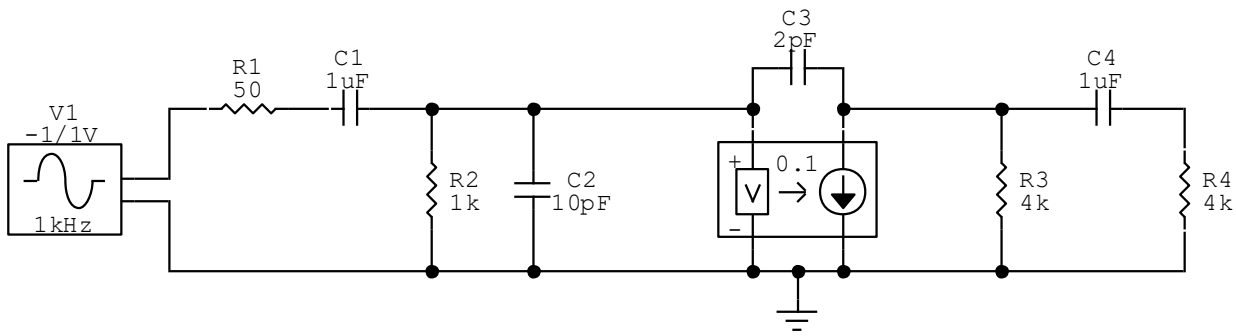

Using Miller's theorem, we can decouple the 2pF capacitor. Millers theorem says

$$Z_1 = Z\frac{1}{1-k}\,, \qquad Z_2 = Z\frac{1}{1-\frac{1}{k}}$$

Because the impedance of a capacitor is its inverse, we can rewrite the miller equations

$$C_1 = (2pF)\big(1-(-200)\big) = 402pF$$

$$C_2 = (2pF)(1-\frac{1}{(-200)} = 2.01pF \approx 2pF$$

Then the 402pF capacitor can be added with the 10pF capacitor in parallel and we have the following circuit:

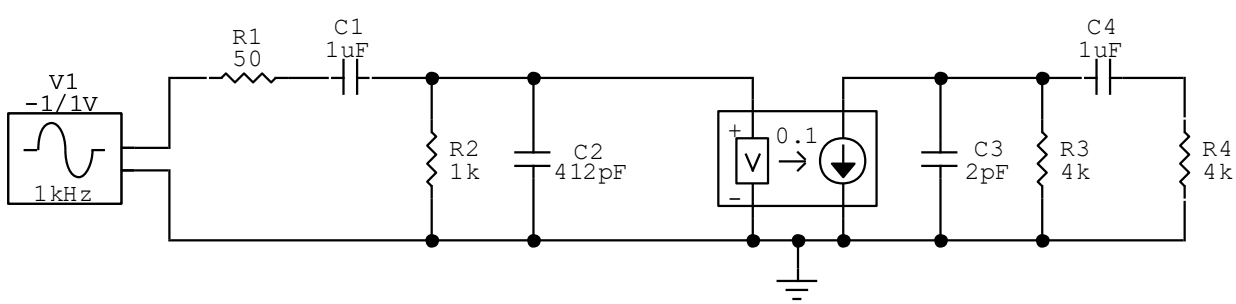

Midband Gain:

At midband frequency, we will treat the 1uF capacitor as a short and the pF capacitors as open.

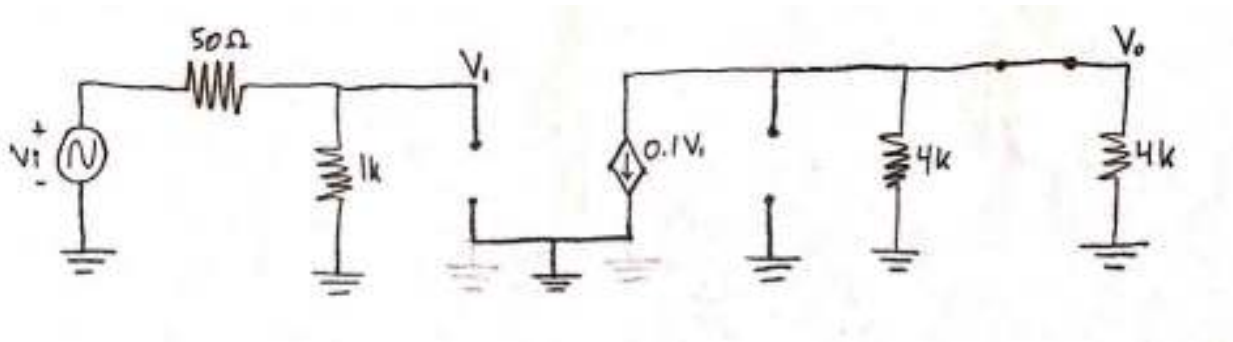

We want to find $\frac{Vo}{Vi}$, so we can write some KCL equations.

$$KCL_1: \quad \frac{V_i - V_1}{50} = \frac{V_1}{1k}$$

$$KCL_2: \quad \frac{0 - V_o}{4k} = 0.1V_1 + \frac{V_o}{4k}$$

Solving these two equations yields

$$\frac{V_o}{V_i} = -190.476$$

Pole Locations:

To find the pole locations in the low frequency response, we will work back from the midband and use the method of short circuit time constants. At this frequency, the pF capacitors are treated as open.

$$\tau_{C1}^{sc} = 1\mu F(50 + 1k)$$
$$= 0.00105s$$

$$\tau_{C4}^{sc} = 1\mu F(4k + 4k)$$
$$= \quad 0.008s$$

To find the pole locations in the high frequency response, we will start at the midband and proceed to higher frequencies using the method of open circuit time constants. At this frequency, the µF capacitors are treated as shorts.

$$\tau_{C2}^{oc} = 412pF(50 \,||\, 1k)$$
$$= \; 1.962 \times 10\text{^}(-8)s$$

$$\tau_{C3}^{oc} = 2pF(4k \,||\, 4k)$$
$$= \quad 4 \times 10\text{^}(-9)s$$

The inverse of these time constants gives us the pole locations.

$$\omega_{Lp1} = \frac{1}{0.008} = 125rad/s$$
$$f_{Lp1} = 19.894Hz$$

$$\omega_{Lp2} = \frac{1}{0.00105} = 952.381rad/s$$
$$f_{Lp2} = 151.576Hz$$

$$\omega_{Hp1} = \frac{1}{1.962 \times 10\text{^}(-8)} = 50{,}970{,}873rad/s$$
$$f_{Hp1} = 8.112MHz$$

$$\omega_{Hp2} = \frac{1}{4 \times 10\text{^}(-9)} = 25{,}000{,}000rad/s$$
$$f_{Hp2} = 39.789MHz$$

B.

Below are the simulated circuits. The darker line represents the circuit after we used miller's and the lighter one represents the untouched original circuit. The waveform matches closely to the original at low frequencies. However, at high frequencies the new waveform strays from the original on both the magnitude and phase bode plots.

Magnitude Plot:

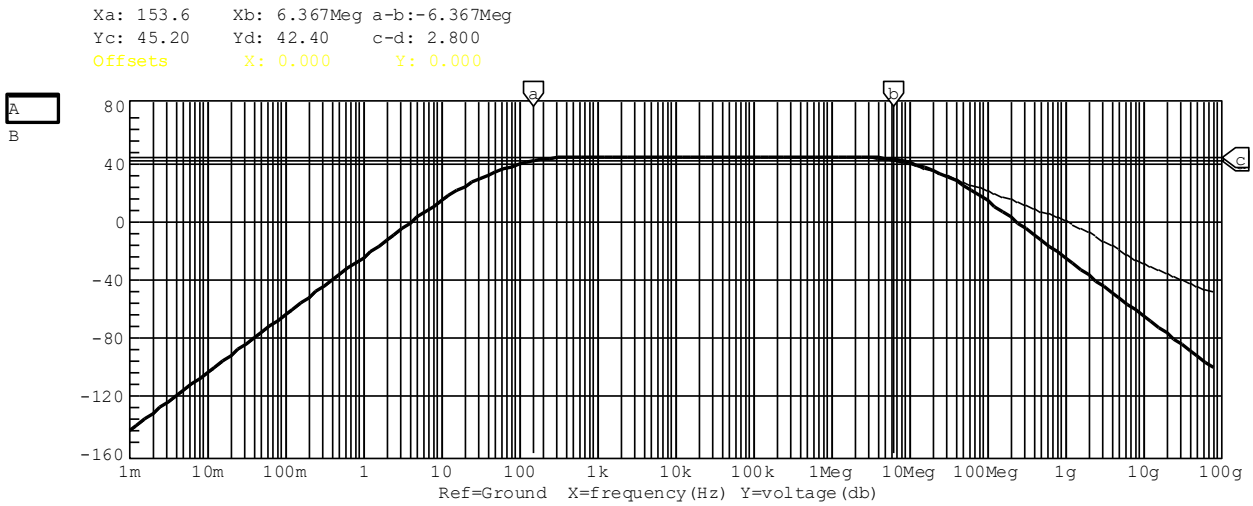

Phase Plot:

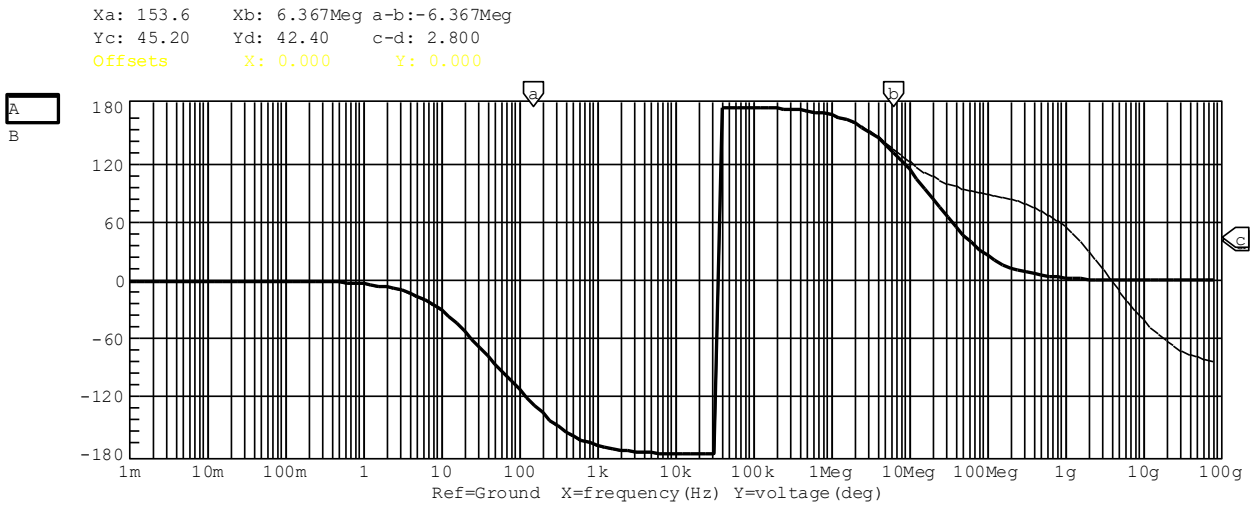

By analyzing the magnitude plot we can approximate the locations of the poles.

Pole	Frequency
ω_{p1}	13.72Hz
ω_{p2}	188.2Hz
ω_{p3}	7.45MHz
ω_{p4}	25.2MHz

Comparing this with the calculated values:

	Calculated	Simulated	%Error
ω_{Lp1}	19.894Hz	13.72Hz	45
ω_{Lp2}	151.576Hz	188.2Hz	19.46
ω_{Hp1}	8.112MHZ	7.45MHz	8.86
ω_{Hp2}	39.789MHZ	25.2MHz	57.89

3dB Locations:

Because we know the locations of the poles, we can easily compute the cutoff frequencies.

$$\omega_{L3dB} = \sqrt{\omega_{Lp1}^2 + \omega_{Lp2}^2}$$

$$= \sqrt{(19.894)^2 + (151.576)^2}$$

$$= 152.876\text{Hz}$$

$$\omega_{H3dB} = \sqrt{\tau_{Hp1}^2 + \tau_{Hp2}^2}$$

$$= \sqrt{(1.962 \times 10\text{^}(-8))^2 + (4 \times 10\text{^}(-9))^2}$$

$$= 2.002 \times 10\text{^}(-8)\text{s}$$

$$\omega_{H3dB} = 7.948MHz$$

If we approximate these points from the plot, we find

$$\omega_{L3dB} = 146.4Hz$$

$$\omega_{H3dB} = 7.651MHz$$

	Calculated	**Simulated**	**%Error**
ω_{L3dB}	152.876Hz	146.4Hz	4.42
ω_{H3dB}	7.948Hz	7.651Hz	3.88